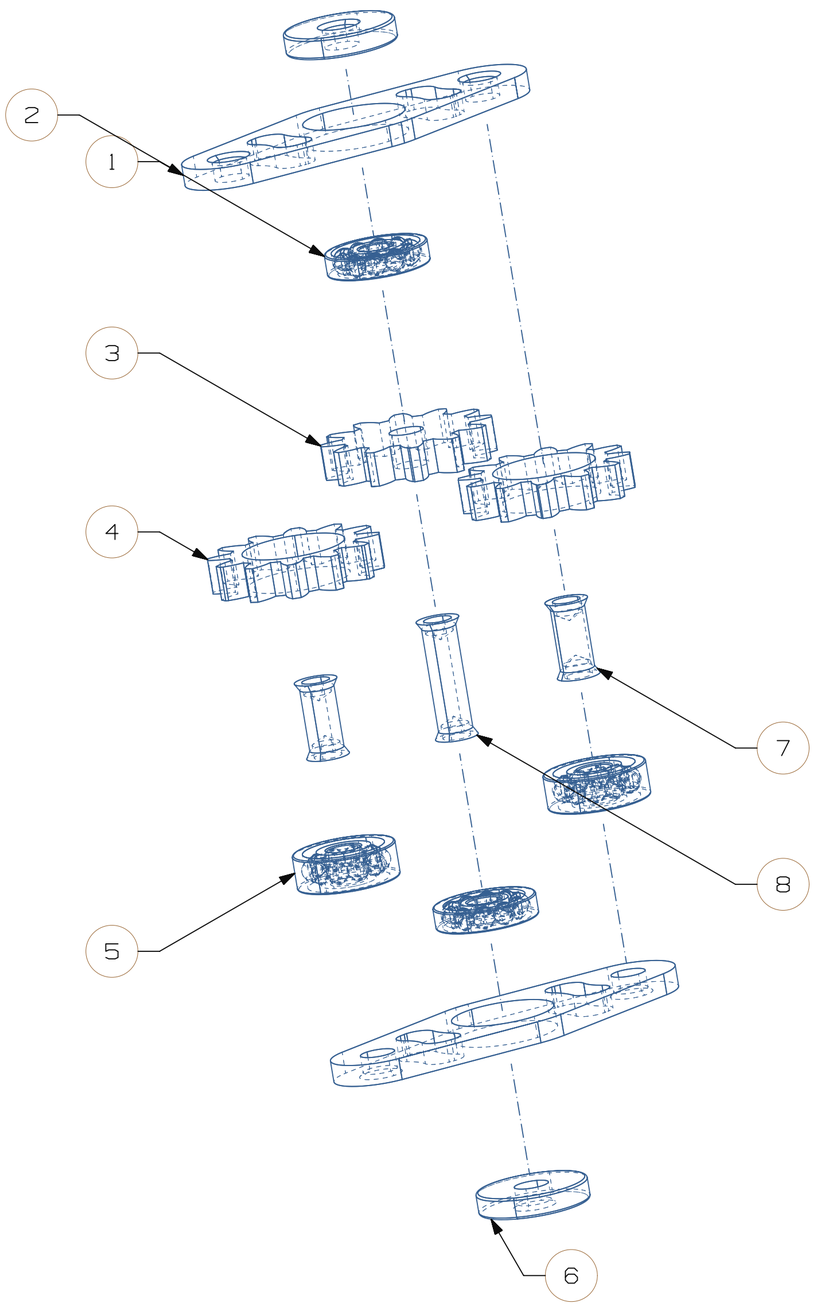

Exploded View

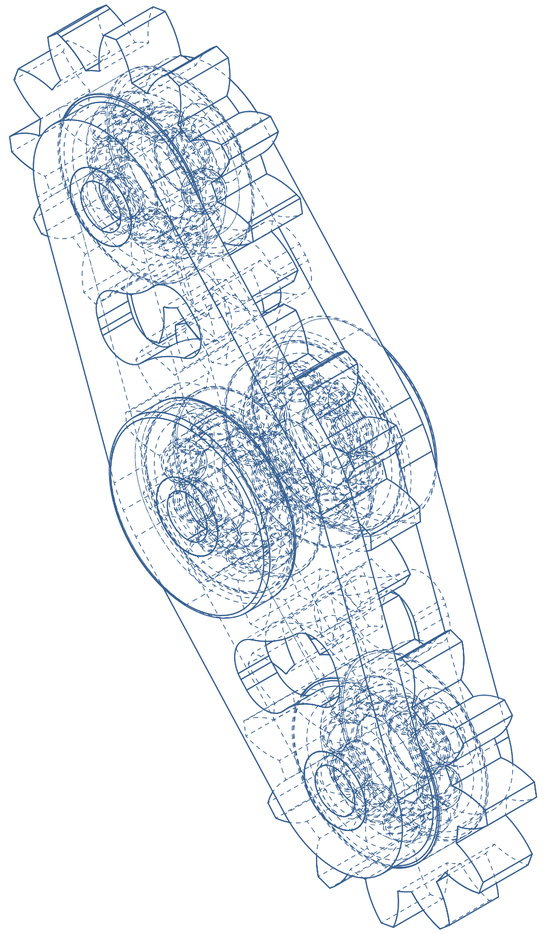

Assembly

PC NO	PART NAME	QTY
8	RIVET 11_DIN_DIN 7341-A8X30-ST-AC-28	1
7	RIVET 11_DIN_DIN 7341-A8X20-ST-AC-18	2
6	TOP SEAL	2
5	INSTRUMENT BALL BEARING_68_AM_AFBMA 12.1.4.1 - 0080-24 - FULL,DE,AC,FULL_68	2
4	GEAR 1	2
3	GEAR 2	1
2	ANGULAR CONTACT BALL BEARING_68_ISO_ISO 15 ABB - 828 - FULL,DE,AC,FULL_68	2
1	TOP COVER	2

ALL DIMENSIONS IN MM

VAMSHI'S

THIS DRAWING HAS BEEN PRODUCED USING AN EXAMPLE TEMPLATE PROVIDED BY SIEMENS PLM SOFTWARE

FIRST ISSUED	
DRAWN BY	
CHECKED BY	
APPROVED BY	

TITLE

SIZE	DRG NO.	SHEET REV
A2	gear fidget spinner assembly_igs	A
SCALE 1:1		SHEET 1 OF 1

A2

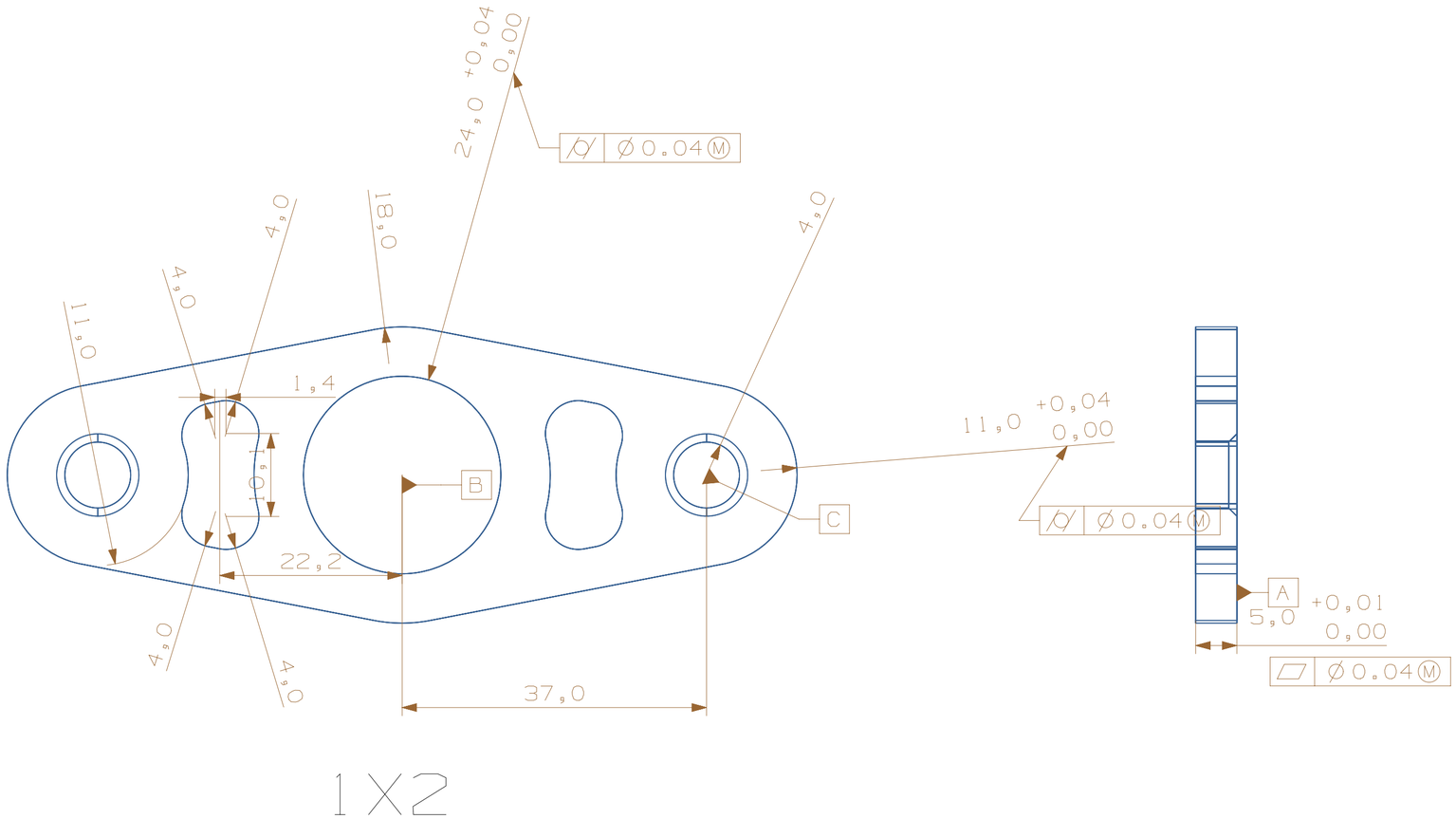

ALL DIMENSIONS IN MM

VAMSHI'S		THIS DRAWING HAS BEEN PRODUCED USING AN EXAMPLE TEMPLATE PROVIDED BY SIEMENS PLM SOFTWARE
FIRST ISSUED		TITLE
DRAWN BY		
CHECKED BY		
APPROVED BY		SIZE A2 / DRG NO. top cover / SHEET REV A
		SCALE 2:1 / SHEET 1 OF 1 / A2

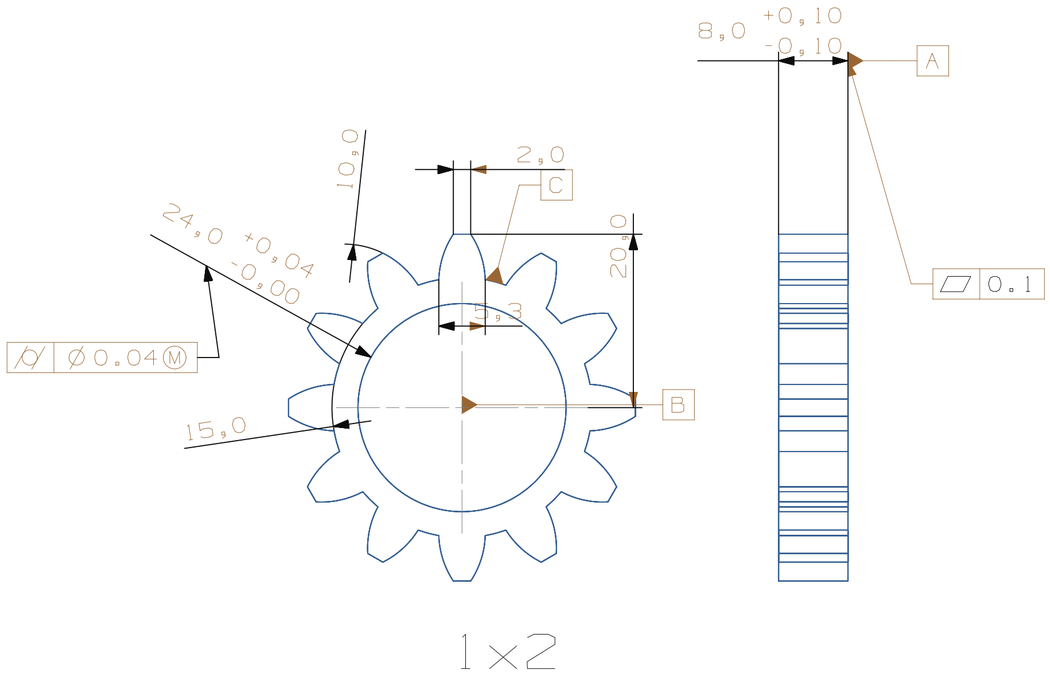

ALL DIMENSIONS IN MM

VAMSHI'S		THIS DRAWING HAS BEEN PRODUCED USING AN EXAMPLE TEMPLATE PROVIDED BY SIEMENS PLM SOFTWARE
FIRST ISSUED		TITLE
DRAWN BY		
CHECKED BY		
APPROVED BY		SIZE A2 / DRG NO. gear 1 / SHEET REV A
		SCALE 2:1 / SHEET 1 OF 1

A2

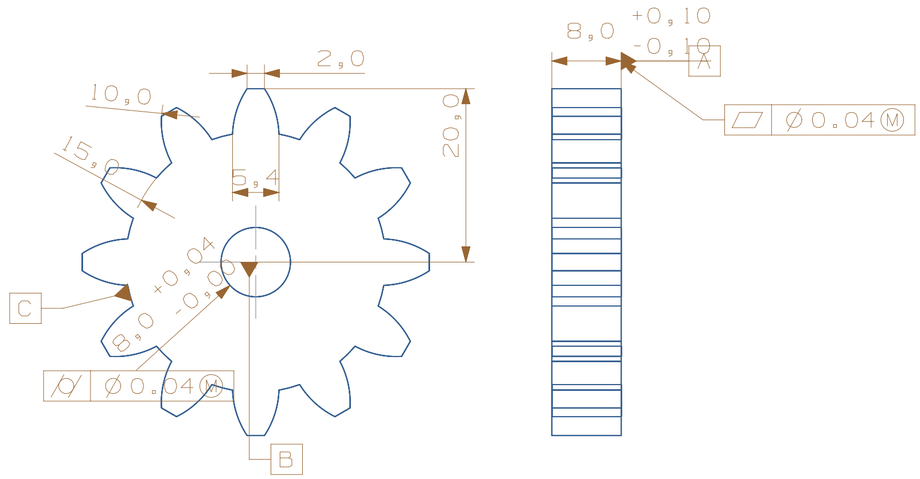

ALL DIMENSIONS IN MM

VAMSHI'S		THIS DRAWING HAS BEEN PRODUCED USING AN EXAMPLE TEMPLATE PROVIDED BY SIEMENS PLM SOFTWARE
FIRST ISSUED		TITLE
DRAWN BY		
CHECKED BY		
APPROVED BY		SIZE A2 / DRG NO. gear 2 / SHEET REV A
		SCALE 2:1 / SHEET 1 OF 1

A2

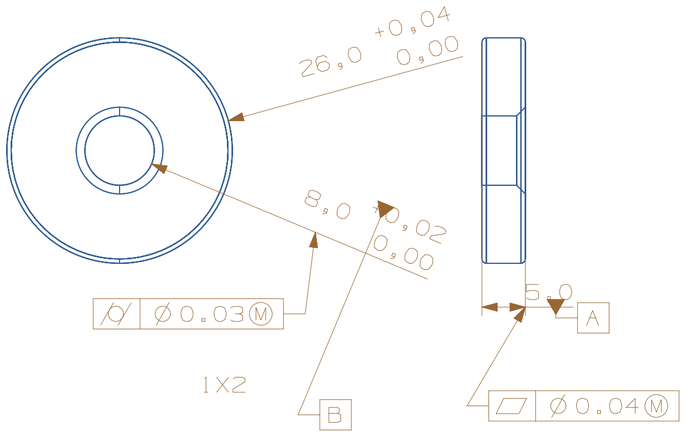

ALL DIMENSIONS IN MM

VAMSHI'S		THIS DRAWING HAS BEEN PRODUCED USING AN EXAMPLE TEMPLATE PROVIDED BY SIEMENS PLM SOFTWARE		
FIRST ISSUED		TITLE		
DRAWN BY				
CHECKED BY				
APPROVED BY		SIZE A2	DRG NO. top seal	SHEET REV A
		SCALE 2:1		SHEET 1 OF 1

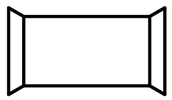

rivet 11_din_DIN 7341-A8x20-St-AC-18

1X2

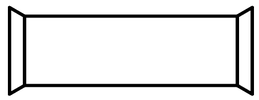

rivet 11_din_DIN 7341-A8x20-St-AC-28

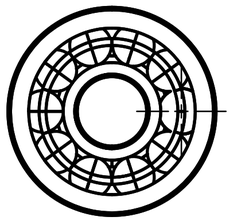

angular contact ball bearing_68_iso_ISO 15 ABB - 828 - Full,DE,AC,Full_68

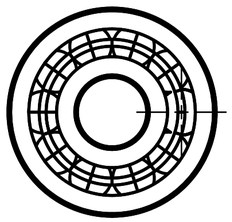

instrument ball bearing_68_am_AFBMA 12.1.4.1 - 0080-24 - Full,DE,AC,Full_68

1X2

ALL DIMENSIONS IN MM

VAMSHI;S		THIS DRAWING HAS BEEN PRODUCED USING AN EXAMPLE TEMPLATE PROVIDED BY SIEMENS PLM SOFTWARE		
FIRST ISSUED		TITLE		
DRAWN BY				
CHECKED BY				
APPROVED BY		SIZE	DRG NO.	SHEET REV
		A2	dwg1	A
		SCALE 2:1		SHEET 1 OF 1